FootMaster North America
division of **DoRodo, LLC**
4655 Division Street, Wayland, MI 49348 USA
866-362-3226 phone
www.footmaster.us info@footmaster.us

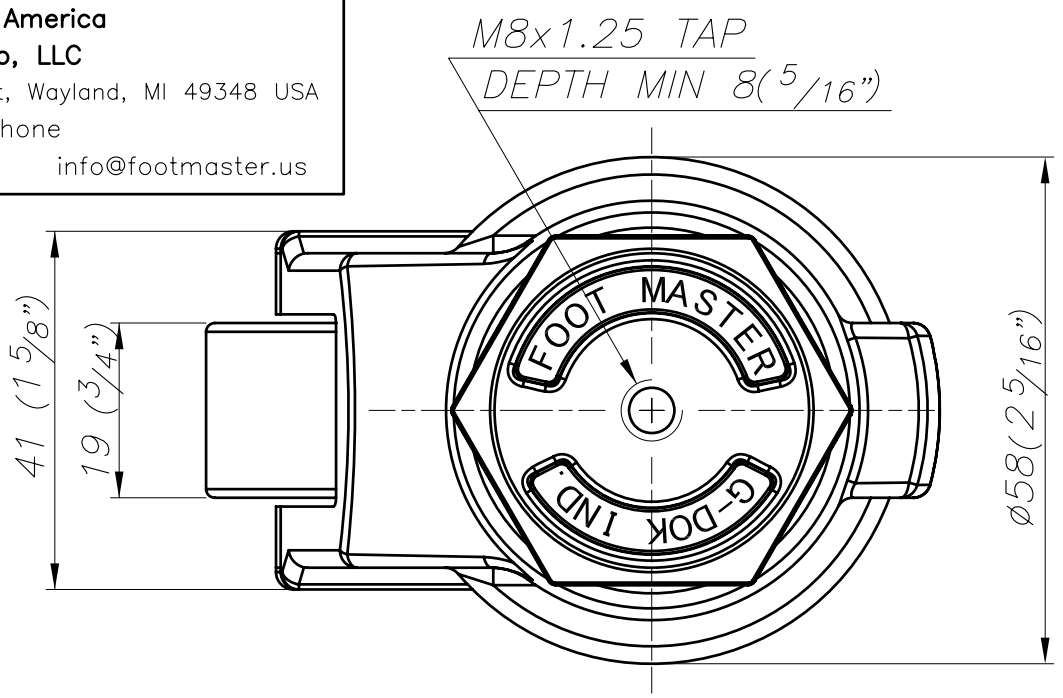

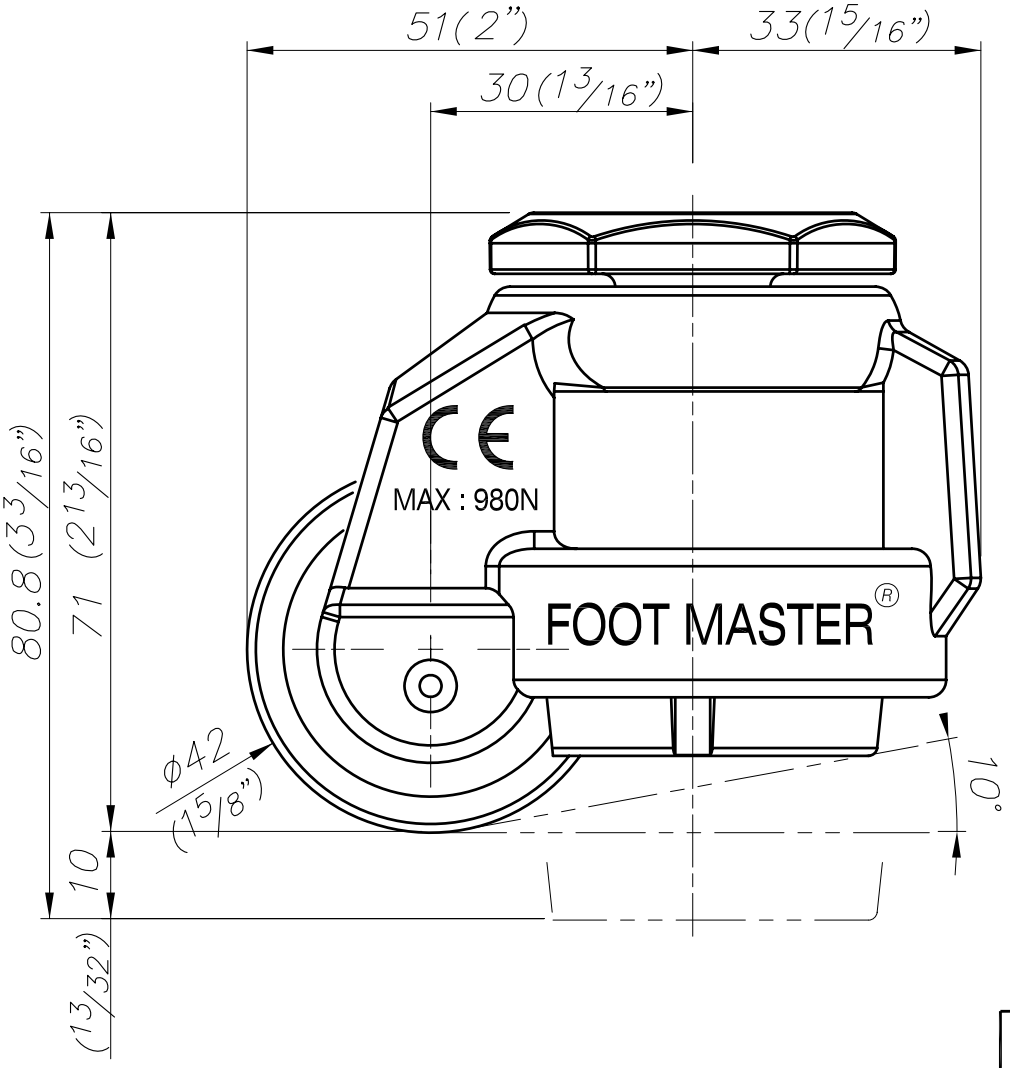

Previously know as
GD-40S

FOOT MASTER ®	FOOMA ®	G-DOK IND.	MODEL NAME	GD-40-S-NYN